Dimension Drawing - Shunt 2000A	
SHU202050200	Shunt 2000A/50mV-0,5 / 3xM10

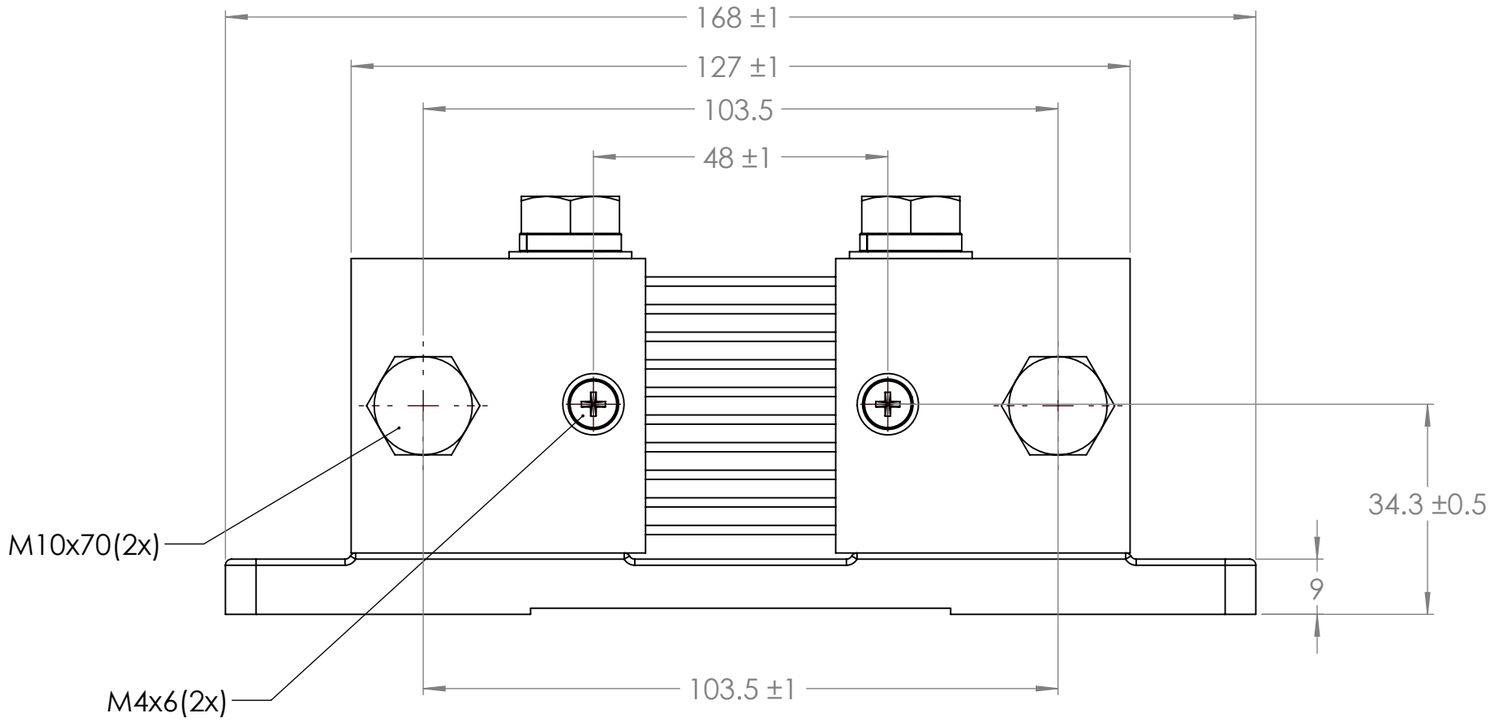

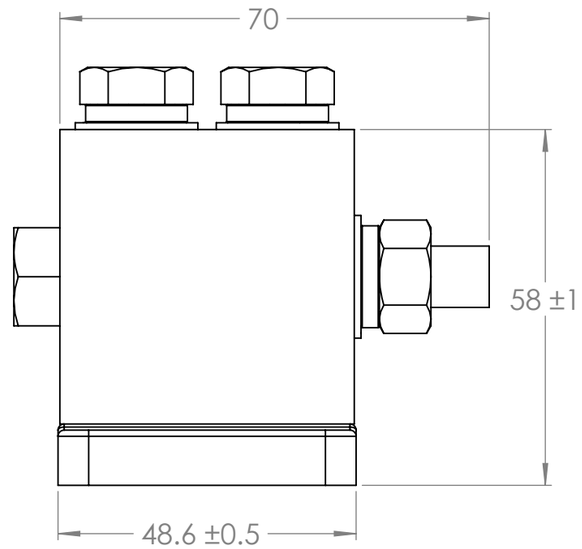

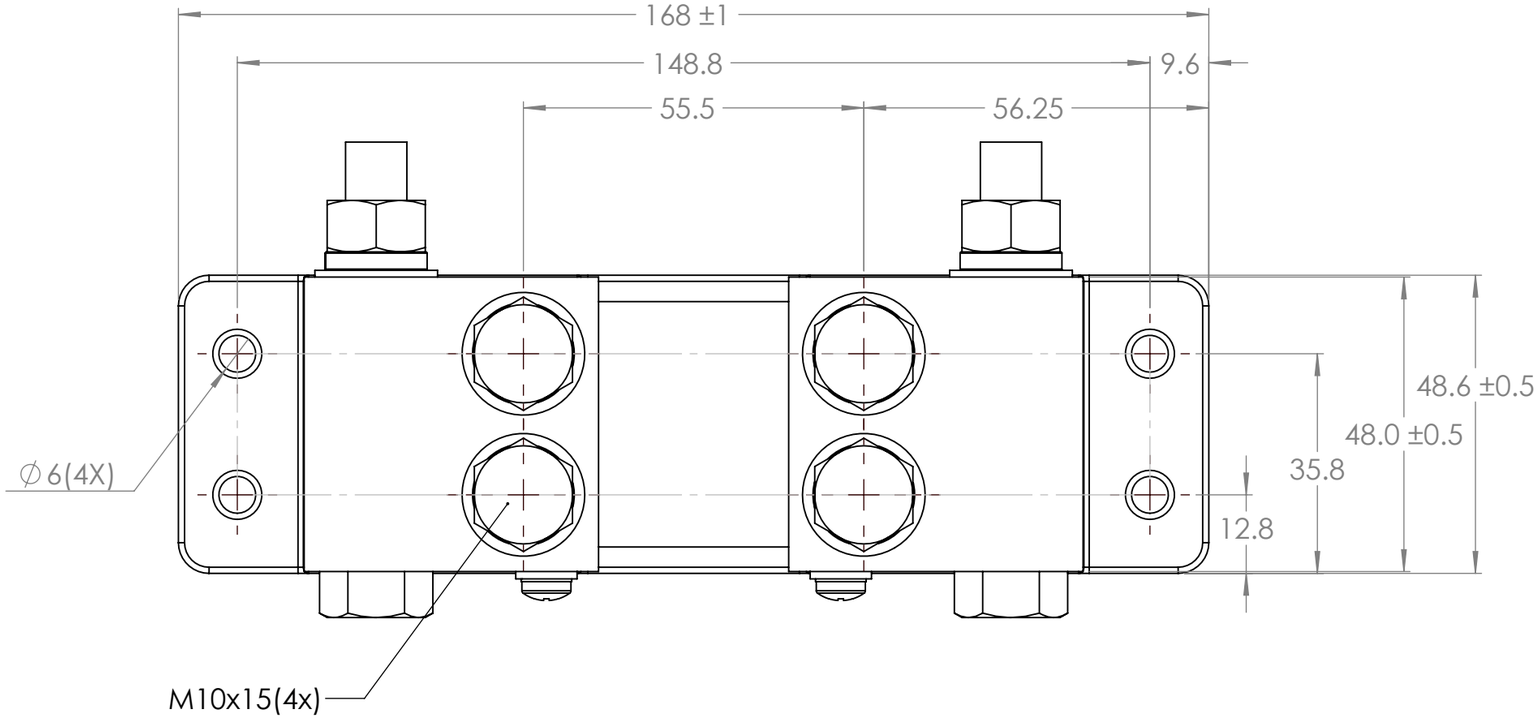

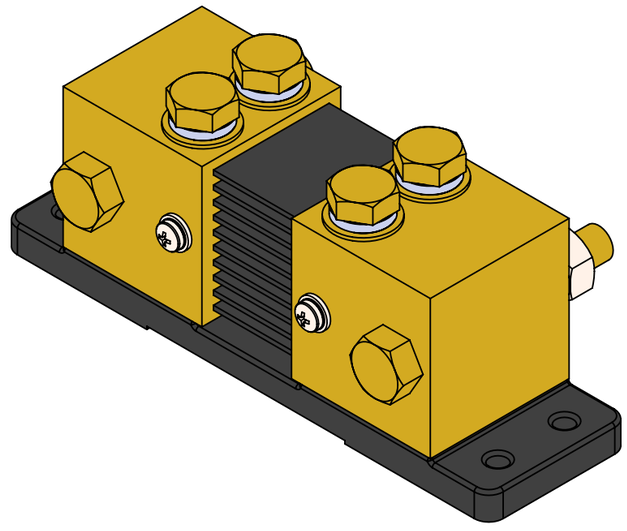

Dimensions in mm

victron energy
BLUE POWER

Rev00